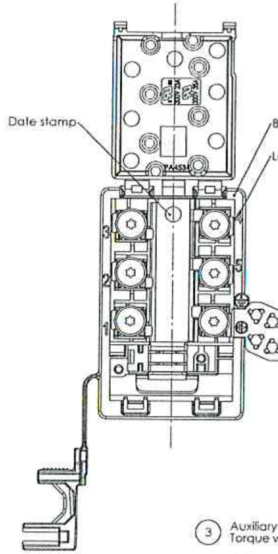

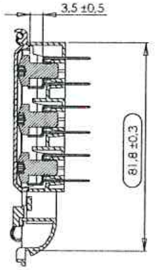

SEZIONE B-B

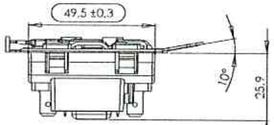

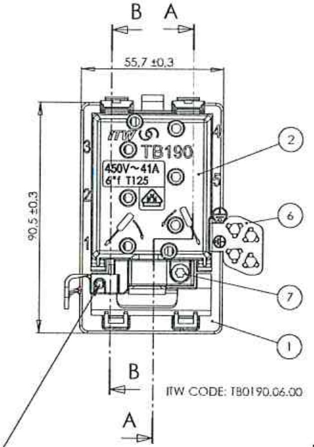

ITW CODE: TB0190.06.00

(3) Auxiliary screw (tie side) is used only for Canadian market. Torque wrench setting 0.5+,1/-0 Nm at 650 rpm

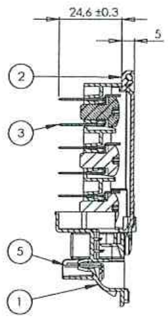

SEZIONE A-A

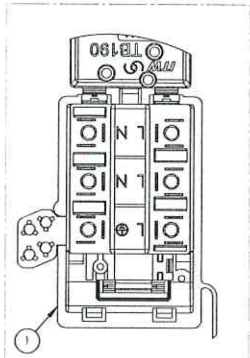

L-N-PE VERSION
for codes see the configuration table

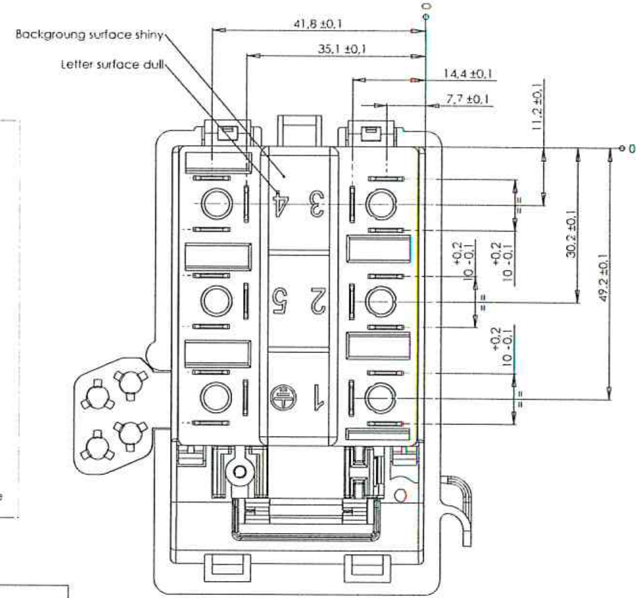

TABS POSITION
SCALA 2:1

PART LIST

RIF.	Denomination	ITW CODE	COLOR	NOTE
1	190 BODY 1-5-PE	19.0557.1301	BLACK	GWIT 775° (5sec.) - GWFI 850°
1	190 BODY L-N-PE	19.0566.1301	BLACK	GWIT 775° (5sec.) - GWFI 850°
2	190 COVER	19.0558.1301	BLACK	GWIT 775° (5sec.) - GWFI 850°
3	CONTACT 3 TABS	14.0167.FENI		Nikel plated steel
4	SCREW M6X11 - Torx T20	14.0170.FEZN.01		Zinc plated steel
5	BRIDGE 19mm	14.0169.OT00		Brass
6	GROUNDING PLATE	14.0168.FEZN		Zinc plated steel
7	SCREW 3.5X19 TORX T20	60.6459.FEZN.A		SUPPLIED IN THE CARTON BOX
7	SCREW 3.5X19 TORX T20	60.6459.FEZN.A		ASSEMBLED IN THE CABLE CLAMP

NOTES:
-COVER: pulling force to remove: min. 50N
-BRIDGE: when it is assembled on the terminal block, torque wrench setting: 2+0,1/-0 Nm (*)
-GROUNDING PLATE: when it is assembled on the terminal block, torque wrench setting: 2+0,1/-0 Nm (*)
-CONTACT FASTONS 6,3x0,8: according to EN 61210. Pull out force >80 N.
-SCREW M6x11 T20: jointed with an 6mm2 wire inserted must withstand without any damage 5x an assembly/disassembly with an electric screw driver adjusted to 2+0,1/-0 Nm at 650 rpm.
-SCREW 3.5x19 T20: jointed must withstand without any damage 5x an assembly/disassembly with an electric screw driver adjusted to 0,8+0,1/-0 Nm at 650 rpm.
-Max wiring diameter 17mm
-Wire size of the power cord: 1.5mm2 - 6mm2

(*) Value for the the wiring connection.

TERMINAL BLOCK CONFIGURATION

L	L	L	N	N	⊕	CODE	E.M.	DESCRIPTION	RIF. 1 (1-5-PE)	RIF. 1 (L-N-PE)	RIF. 2	RIF. 3	RIF. 4	RIF. 5	RIF. 6	RIF. 7	RIF. 7
3.5 +/-0.5	3.5 +/-0.5	3.5 +/-0.5	3.5 +/-0.5	3.5 +/-0.5	3.5 +/-0.5	TB0190.XX.XX	0			1	1	6	6	3	1	1	
1	2	3	4	5	⊕												
3.5 +/-0.5	3.5 +/-0.5	3.5 +/-0.5	3.5 +/-0.5	3.5 +/-0.5	3.5 +/-0.5	TB0190.06.08	0	TB190/6PE/WS	1		1	6	6	3	1	1	
3.5 +/-0.5	3.5 +/-0.5	3.5 +/-0.5	3.5 +/-0.5		3.5 +/-0.5	TBD		TB190/5PE/WCK/WSA	1		1	5	5	2	1		1
						TB0190.06.07	0	TB190/6PE	1		1	6	6	3	1		
	3.5 +/-0.5	3.5 +/-0.5			3.5 +/-0.5	TB0190.03.02	0	TB190/3PE	1		1	3	3		1		
			3.5 +/-0.5	3.5 +/-0.5	3.5 +/-0.5	TB0190.03.01	0	TB190/3PE/WCK/WSA	1		1	3	3		1		1
3.5 +/-0.5	3.5 +/-0.5	3.5 +/-0.5	3.5 +/-0.5	3.5 +/-0.5	*1.3Nm (+0.1/0)	TB0190.06.06	0	TB190/6PE/WCK/WSA	1		1	6	6	3	1		1
3.5 +/-0.5	3.5 +/-0.5	3.5 +/-0.5	*1.3Nm (+0.1/0)	*1.3Nm (+0.1/0)	*1.3Nm (+0.1/0)	TB0190.06.05	0	TB190/6PE/WSA/WCK/BR 4-5	1		1	6	6	3	1		1

* Torque values indicated in the table are for the assembly process.
3,5 +/-0,5: is the position of the screw M6x11
Empty box: contact not assembled

Symbol	
WCK	With cover closed
BR	Bridge assembled into the T.B. (followed by the poles number where bridge is assembled)
WSA	With screw assembled in the cable clamp
K	Cover supplied separatly
WS	With screw for cable clamp supplied into the box
E	With Grounding Plate or earth bracket.

TECHNICAL DATA

Property	UM	EU RATING	US RATING
Rated insulation voltage	V rms	450V	300V
Rated current	A rms	41A (3 tabs connected)	35A
Rated connecting capacity	mm2	6mm2	8 - 22 AWG
Conductor type		Flexible	
Number of poles	n.	3 - 6	
Tabs		6.3x0.8	
Ambient temperature	°C	T125	
Protection degree	IP	IP20	
Plastic material		According to EN 60335-1 GWIT 775° (5sec.)/ GWFI 850°	
Terminal Block screw		M6 x 11 Torx T30	
Cable clamp screw		3.5x19 Torx T20	
Min. thickness			
Kind of construction			
TORQUE WRENCH SETTING			
Terminal screws		2 N/m (650rpm)	18 lb/in
Cable clamp screw		0.8 N/m (650 rpm)	7 lb/in

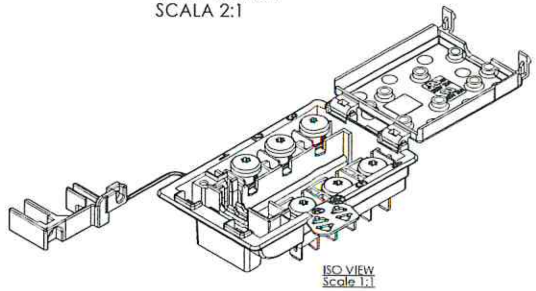

ISO VIEW
Scale 1:1

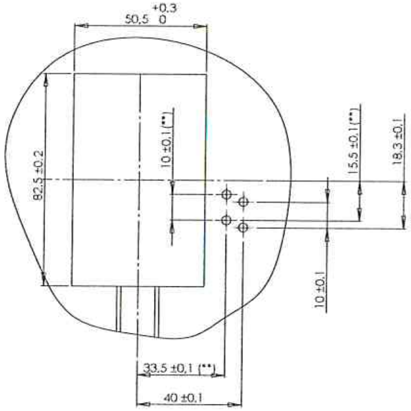

PANEL CUT OUT THICKNESS: 0,7-1,5mm
(**) alternative for grounding plate fixing

Rev.	DATA	Descrizione	Progettista
10	12/02/15	Aggiornato disegno al pezzo: quota 90.5±0.3, era 90.8±0.3.	Armaroli
9	26/11/14	Aggiunto nuovo codice TB0190.06.08. (TB190/6PE/WS).	Armaroli
8	29/09/14	Aggiunto nuova versione a 5 poli.	Chirumbolo
7	05/09/14	Aggiunto nuovo codice TB0190.06.07. (TB190/6PE).	Armaroli
6	08/07/14	Removed note: "Min wiring diameter 9.5mm".	Armaroli
5	30/06/14	Add wire size note: 1.5mm2 - 6mm2.	Armaroli
4	15/04/14	Updated code TB0190.06.05 and configuration TB190/6PE/WSA/WSK/BR 4-5.	Armaroli
3	04/02/14	Modified metric-screw head: from T25 to T20. Modified screw-plast head: from T10 to T20. Added new codes version: TB0190.03.01 (TB190/3PE/WCK/WSA), TB190.03.02 (TB0190/3PE)	Armaroli
2	23/01/14	Added new codes version: TB0190.06.05. (TB190/6PE) and TB0190.06.06 (TB190/6PE/WCK/WSA).	Armaroli
1	01/10/13	Scorporato disegno, versione PA66.	Armaroli

Revisione disegno / Modifiche (Change)

PER PARTI NON QUOTATE
QUOTE FUNZIONALI 0

ITW Industrial Components S.r.l.
Cooking & Heating Group
Classe Funzionale
TB190
BUILT IN TERMINAL BLOCK
TB0190_DSP02
A1
0
01/10/2013 Chirumbolo Armaroli
P.D. PR190

OLD REF. PD: 4768